DTW Mixer Drive

PAUDLER, Inc.

A Unit of Robbins & Myers, Inc.

The Pfaudler DTW Mixer Drive

▼ Figure 1.

The Five Standard DTW Drive Configurations

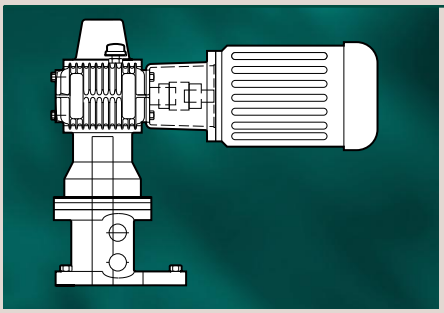

Type C Drive*
(Fixed Speed Gear)

C-face motor mounted to single-reduction reducer via motor adapter and flexible coupling.

Advantage: Permits use of standard C-face motor.

Type FG Drive*
(Fixed Speed Gear)

D-flange motor, with helical pinion on output shaft, mounted directly to double-reduction reducer.

Advantages: Minimum headroom. Completely enclosed. Easy speed change.

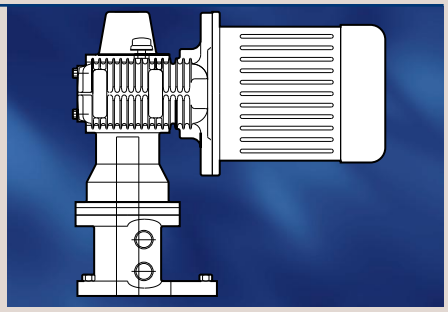

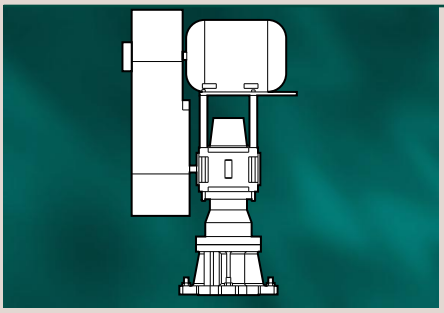

Type SS Drive
(Variable Speed Belt)

Single-reduction reducer with variable-pitch sheaves.

Advantage: Permits use of standard foot-mounted motor.

Type FB Drive*
(Fixed Speed Belt)

Single-reduction reducer with primary reduction by standard sheaves and V-belts.

Advantages: Uses standard foot-mounted motor. Set speed at 7% increments over a wide range.

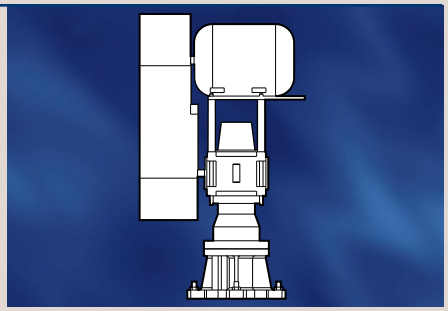

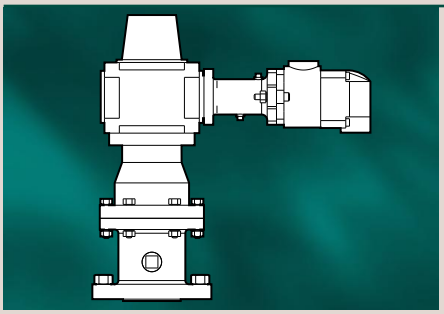

Type VH Drive
(Variable Speed Hydraulic)

Single-reduction reducer with hydraulic motor and flexible coupling. Also available with air motor.

Advantages: Explosion-proof. Provides maximum variable speed ranges. Minimum space required. Built-in overload protection.

**Also available with a variable frequency motor.*

Available Option for Fixed Speed Drives

Variable frequency motor control can be added to any of the fixed speed drives – Types C, FG, or FB.

Advantages:

Simplifies drive-speed changes. Dramatically expands speed ranges. No hydraulic supply needed.

Primary Reduction:

- Helical gears – Type FG
- V-belts and sheaves – Types FB and SS
- Variable speed hydraulic – Type VH

Secondary Reduction:

- Worm gear – All types
- Reducer sizes – 2.5”, 3”, 4”, 5”, 6”, 7” or 8” center distance
- Reduction ratios – 5:1, 10:1, 15:1 or 20:1. Other ratios available

Motive Power:

1 to 50 horsepower

Over A Decade of Dependability

The 1 to 50 horsepower Pfaudler DTW Mixer Drive is a quiet-running, low-profile unit, efficient and cost effective, thanks to Pfaudler's 60 years of drive design experience that went into its creation.

Today, the DTW Drive has more than proven its worth by over a decade of dependable, low maintenance field performance in all kinds of chemical processing and pharmaceutical service from light to heavy duty.

You can use the DTW Drive on closed or open vessels of alloy or glassed-steel construction. Only simple bridge supports are needed on open vessels. On reactors, standard agitator nozzles are used (refer to Mounting Data, page 6). Note: The DTW Drive is a direct replacement for Pfaudler’s earlier TW Drive. Refer to page 6 for more information.

Choose from 7 Sizes, 4 Configurations and 4 Seal Types

Seven DTW Drive sizes are available, handling agitator shaft diameters ranging from 1.5 to 5.5 inches. Each drive size can accommodate motors of several different horsepower ratings, as dictated by the anticipated service requirements (see data on pages 6 and 7).

You can specify any variety of DTW Drive configurations by selecting:

- Fixed speed drive, with occasional speed changes made by changing gears or sheaves.
- Either double- or single-reduction speed reducer (each in seven standard center distance sizes).
- Variable speed drive, changing speeds with variable frequency drives for electric motors, variable pitch sheaves, or with a hydraulic motor.

The various DTW Drive physical configurations are described in Figure 1.

Although it does not affect the drive configuration, you also have a choice of:

- Single or double mechanical seals
- Dry or lubricated seals.

A cutaway view of the Pfaudler double mechanical lubricated seal appears in Figure 2.

Speed Reducer Variations

All DTW Drives employ the rugged and reliable Pfaudler double-enveloping worm gear for secondary speed reduction. The superior tooth contact, resulting from this design, is shown graphically in Figure 3.

The single reduction version on Types C, FB, SS, and VH drives omit the helical gears and have the worm shaft extended through the housing for installation of sheaves or a flexible coupling. No motor seal is required.

The double reduction speed reducers used on Type FG drives, achieve primary reduction by means of helical gears, with the motor directly driving the helical pinion shaft.

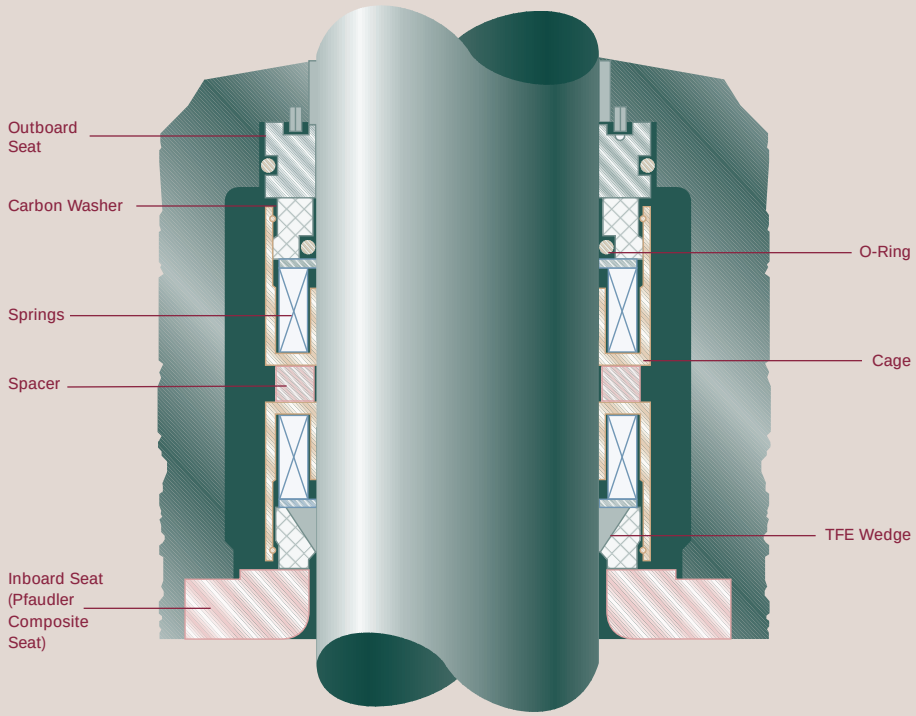

▲ Figure 2.

Pfaudler's double mechanical lubricated seal, pressurized with a wide range of suitable barrier fluids, can provide a reliable, low-maintenance shaft seal. FDA-approved barrier fluids are available.

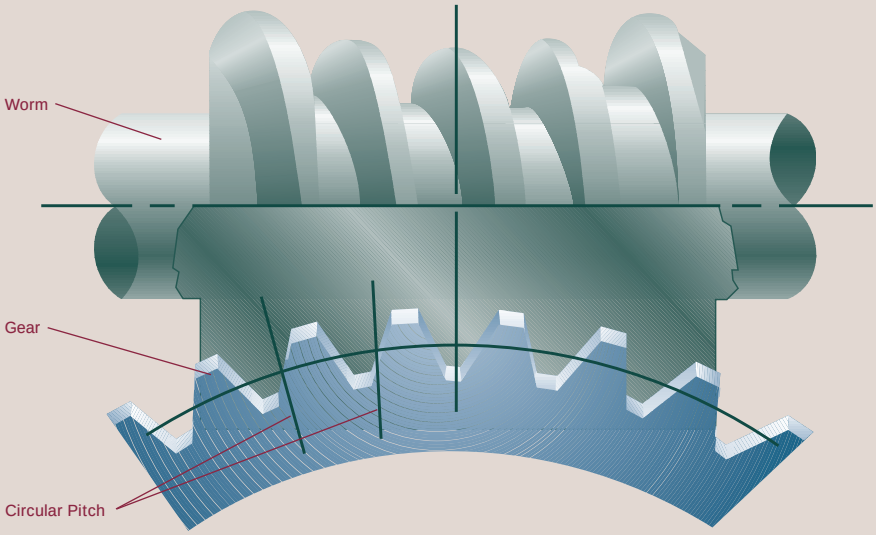

▼ Figure 3.

Pfaudler's unique double-enveloping worm gear design provides greater simultaneous tooth contact area to handle heavier mixing loads, affords 50% higher overload capability than competitors' gear types.

Key Benefits of the DTW Drive

Rugged, Compact Design

The compact design is made possible by the double-enveloping worm gear, which occupies less space than conventional gearing. The resulting integral cast housing with low profile provides easy access to top head openings for piping and accessories.

Effective Dry Well Construction

Pfaudler's dry well is built inside the hollow gear shaft (see Figure 4), so gear lubricant cannot splash over the top and leak out as it may with other designs.

Quiet, High-Capacity Worm Gear

The double-enveloping design used by Pfaudler (Figure 3) simultaneously engages more gear teeth more fully than a conventional worm. The greater tooth contact area gives you increased load capacity and shock load capability.

As a result, the DTW Drive can handle heavier mixing loads with a 300% overload capability (compared to 200% for gearing used by competitors). In the single-reduction arrangement (no helical gearing), overall efficiency is above 90% under normal operating conditions.

Durable and quiet running (less than 80 dBA in most cases), the double-enveloping worm gear has proven its merit by many years of reliable field service in various Pfaudler drives.

Wide Speed Range, Easily Changed

For secondary reduction, you have a choice of worm and gear ratios from 5:1 to 20:1. Primary reduction by helical gears, or motor belts and sheaves on the fixed speed drives, permits wide variations in operating speeds. You can easily change speeds in the field, if necessary, by changing gears or sheaves.

Speed changes are more readily made on the variable speed Type SS drive

▼ Figure 4.

Pfaudler's DTW Mixer Drive, Cross-Sectional View.

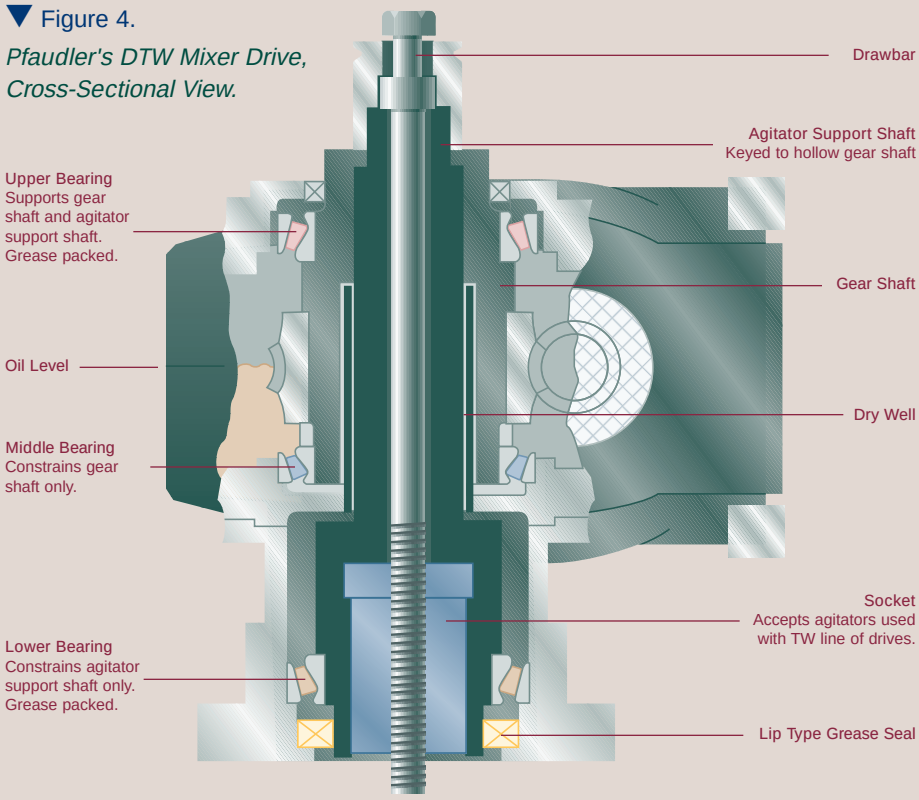

by adjusting the pitch of the sheaves. And of course, such changes are easiest of all on any drive employing a variable frequency drive or a hydraulic motor.

Efficient Shaft Seals

To isolate a reactor's contents from its environment, you may choose from a selection of Pfaudler mechanical seals designed for installation on the agitator shaft.

A double mechanical seal is essentially two single seals back to back. As such, it provides dual protection against leakage and is especially valuable where the vessel contents are toxic, highly corrosive, or where the operating conditions are severe.

Lubricated double seals (Figure 2) are normally supplied with a Pfaudler pressure lubricator to pressurize and cool the seal lubricant.

Dry seals are pressurized with inert gas instead of lubricant. This averts any possibility of lubricant leaking into the reactor and contaminating the product, and also prevents possibly harmful reactor contents from escaping into the environment.

The dry seals fit interchangeably in the seal housings of all Pfaudler drives (although some older housings may require slight modification). For complete details on these dry seals, request Pfaudler Data Sheet DS22-900.

Both dry and lubricated seals are also available in single configuration. A single seal has one pair of sealing faces and functions effectively where operating conditions are not severe and reactor contents are not harmful. Single seals are well suited for vacuum service.

Pfaudler's Most Popular Drive…The SRW

The drive of choice for production and pilot-scale applications on reactors as small as 200 gallons. The SRW drive features an open-pedestal design that makes seal changes faster and easier than ever before. For details, ask your Pfaudler representative for Sales Bulletin SB22-700.

Replaces Old TW Drive

The DTW Drive is an ideal replacement for the discontinued Pfaudler TW Drive and is directly interchangeable.

The only major difference is that the DTW Drive employs special dry-well construction in the reducer compartment for positive retention of gear lubricant. Physical assembly to the pedestal and agitator is identical to that of the TW Drive. For some drive sizes, however, a new drawbar is needed when converting to the DTW Drive.

Drive Data (C, FG, & SS/FB)

Size	2.5N			3N			4F		5F		6F	
Type	C	FG	SS/FB	C	FG	SS/FB	C	FG	C	FG	C	FG
WT	80		92	230		255	365		550		740	
HP	1 - 3			1 - 7.5			3 - 15		5 - 30		7.5 - 40	
A*	13.6	13.6	27.4	16.8	16.8	29.3	22.8	22.8	25.5	25.5	28.5	28.5
B	6	6	8.2	5	5	9.4	8	8	10.3	10.3	9.3	9.3
C	6.8	6.8	14	7.3	7.3	16.4	10	10	11.9	11.9	13.6	13.6
D	3.8	3.8	9.1	4.6	4.6	7.3	7.9	7.9	9.5	9.5	10.4	10.4
E	8.8	5.8	7.3	10.2	6.3	7.3	12.6	7.6	13.7	8.6	14.8	9.6
C, D	–	–	13.2	–	–	14.4	–	–	–	–	–	–

N: non-cooled F: fan-cooled reducer

Drive weight does not include: motor, shaft and impeller, and pedestal. HP's shown are the 1800 RPM motor sizes that fit on drive. Consult Pfaudler concerning specific power transmission limitations as a function of output speed.
*Add Pedestal/Seal Housing dimension to determine overall height.

Motor Data

V.F. HP	Std. HP	Frame Size	Wt.	C		FG		SS/FB	
				F	G	F	G	F	G
–	1	143	45	6.5	10.6	7.1	10.3	7.4	–
1	1.5, 2	145	52	6.5	11.6	7.1	11.3	7.4	–
1.5, 2	3	182	90	8.8	13.3	9.3	12.6	9.1	–
3	5	184	105	8.8	14.3	9.3	13.6	9.1	–
5	7.5	213	150	9.0	15.8	11.3	15.1	10.8	–
7.5	10	215	170	9.0	17.3	11.3	16.6	–	–
10,15	15	254	265	9.0	20.1	13.5	18.4	–	–
20	20	256	295	9.0	21.8	13.5	20.1	–	–
25	25	284	395	–	–	14.6	19.9	–	–
30	30	286	445	–	–	14.6	21.5	–	–
40	40	324	565	–	–	16.8	21.9	–	–

Motor weight and dimensions are based on Class 1, Group D enclosure and vary with enclosure and manufacturer. Frame size applies to 1800 rpm motor.

Pedestal/Seal Housing Data

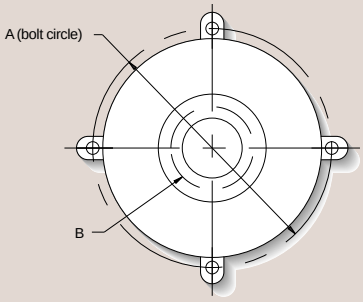

DTW Size	No. of Bosses	A	B	C	Wt. (lb.)
2.5	3	10.5	2	5.4	85
3	4	15	4	6.4	120
4	4	15	4	6.4	120
5	4	15	4	6.5	125
6-4.5	6	24	6*	7.5	150

*Class 300 drilling only. All dimensions in inches.

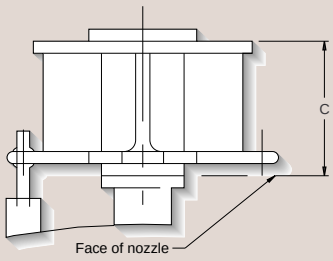

C, FG, & SS/FB Specifications

C

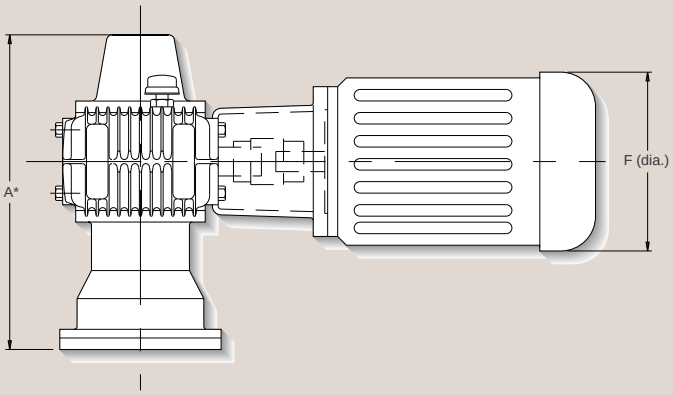

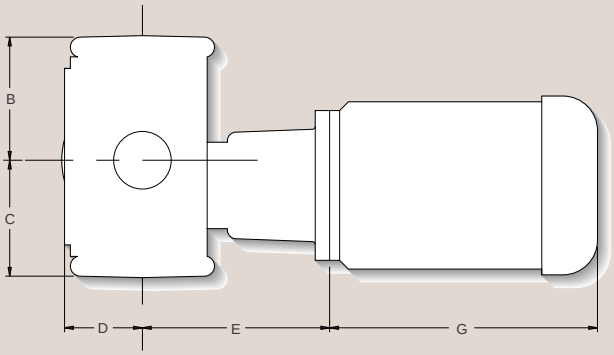

FG

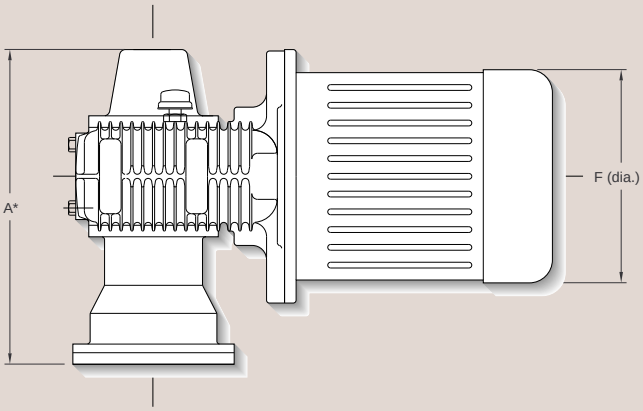

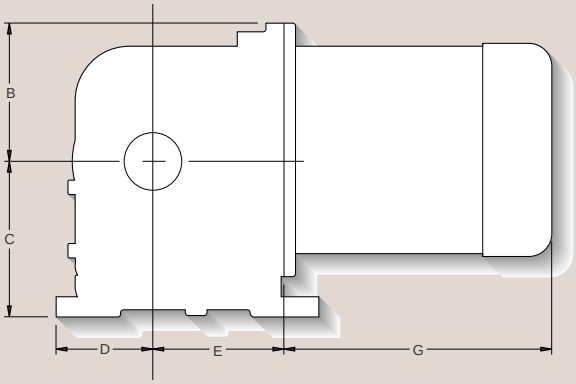

SS/FB

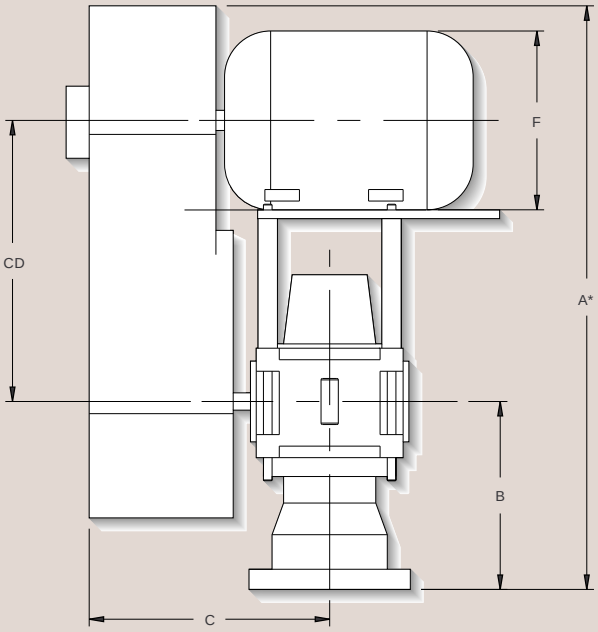

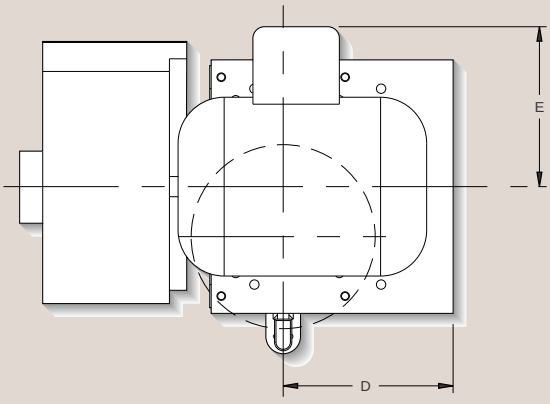

SB22-301-2

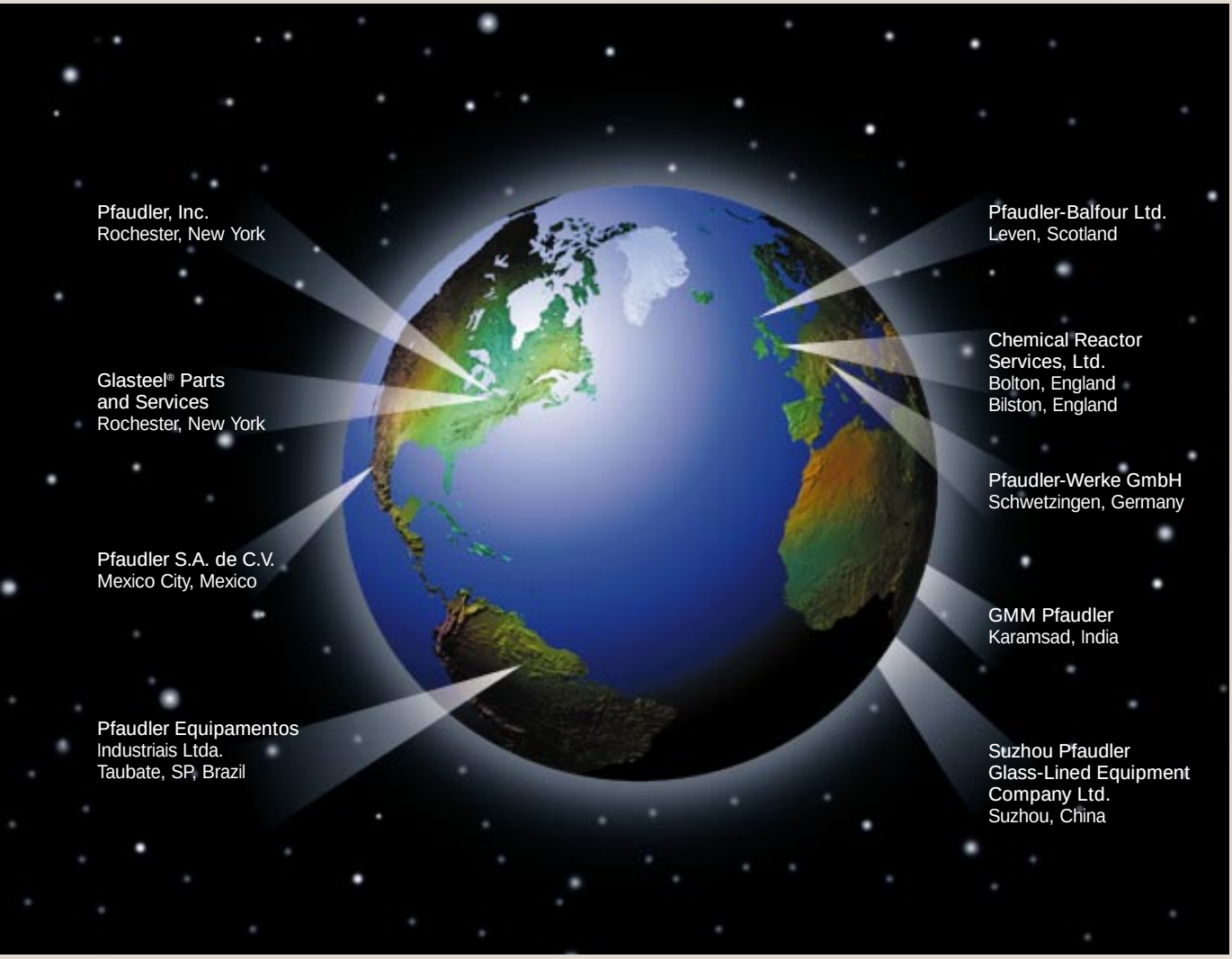

The information contained in this bulletin is believed to be reliable general guidelines for consideration of the products and services described herein. The information is general in nature and should not be considered applicable to any specific process or application. Pfaudler, Inc. expressly disclaims any warranty, expressed or implied, of fitness for any specific purpose in connection with the information contained herein.

US Facilities

Pfaudler, Inc.
Rochester, New York
Tel: (1 716) 235-1000
Fax: (1 716) 423-9644

Glasteel® Parts and Services
Rochester, New York
Tel: (1 716) 235-1010
Fax: (1 716) 235-7923

Worldwide Facilities

Chemical Reactor Services Ltd.
Bolton, England
Tel: (44 1204) 862-777
Fax: (44 1204) 577-484

Bilston, England
Tel: (44 1902) 353-637
Fax: (44 1902) 495-696

GMM Pfaudler
Karamsad, India
Tel: (91 26) 9230367
Fax: (91 26) 9231935

Pfaudler-Balfour Ltd.
Leven, Fife, Scotland
Tel: (44 1333) 423-020
Fax: (44 1333) 427-432

Pfaudler Equipamentos
Industriais Ltda.
Taubate, SP, Brazil
Tel: (55 122) 326-244
Fax: (55 122) 326-301

Pfaudler S.A. de C.V.
Mexico City, Mexico
Tel: (52 5) 355-0100
Fax: (52 5) 355-0809

Pfaudler-Werke GmbH
Schwetzingen, Germany
Tel: (49 620) 2850
Fax: (49 620) 222412

Suzhou Pfaudler Glass-Lined Equipment Company Ltd.
Suzhou, China
Tel: (86 512) 7239104
Fax: (86 512) 7232903

Pfaudler, Inc.
A Unit of Robbins & Myers, Inc.

1000 West Avenue
PO Box 23600
Rochester, NY 14692-3600
Tel: 716 235 1000
Fax: 716 423 9644

Copyright ©
Pfaudler, Inc. 1996
A Unit of Robbins & Myers, Inc.
All rights reserved

6/96 CG 3M Mech No. 543