SRW Mixer Drive

PAUDLER
REACTOR SYSTEMS

The Pfaudler SRW Mixer Drive

Introduced in 1990, the SRW drive has become the most popular mixer drive for glassed-steel reactors (and it's often used on alloy vessels as well). Its popularity comes as no surprise; it was designed by Pfaudler engineers based on the suggestions provided by mixing experts and maintenance specialists from over 70 major chemical and pharmaceutical manufacturers. The number of models has grown and the SRW drive now covers the entire range of power and torque once covered by the RW and RH drives combined. Now available in six center-distance sizes, meeting power requirements from 3 to 100 hp, the SRW drive brings improved overall performance and maintainability together in one heavy-duty drive system.

Features include:

1. World's easiest seal change-out
2. Separate seal bearing, mounted directly above the seal housing, for greater shaft stability
3. L-10 bearing life in excess of 100,000 hours on drive output shaft
4. Quietest gearing available (less than 80 dBA in most cases)
5. Standard foot-mounted motor
6. Rugged gearbox with a proven track record.

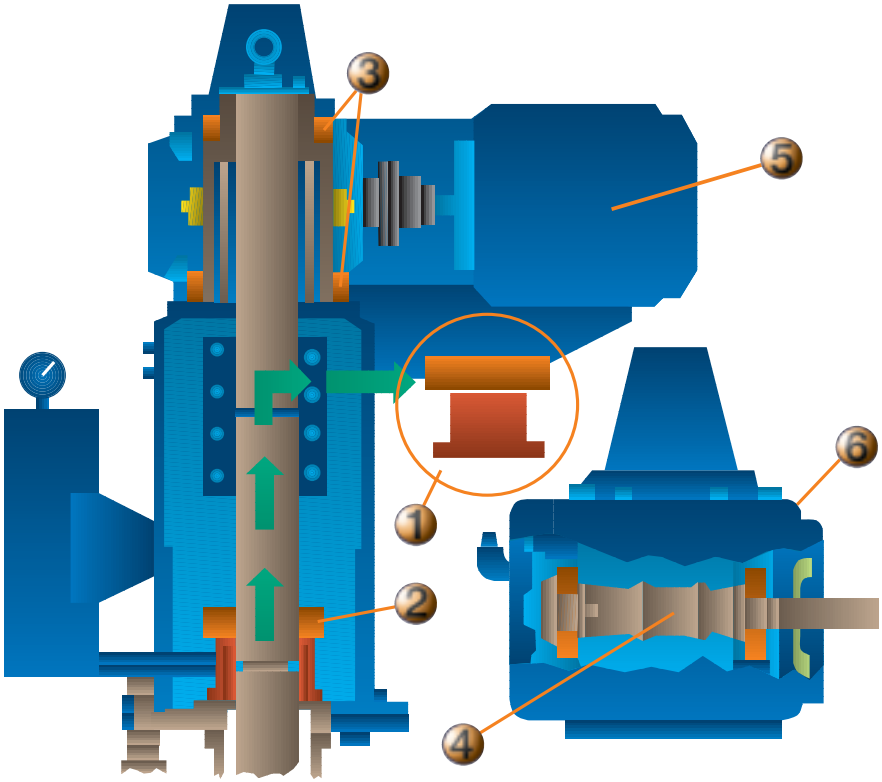

Key Benefits and Design Advantages

Figure 1

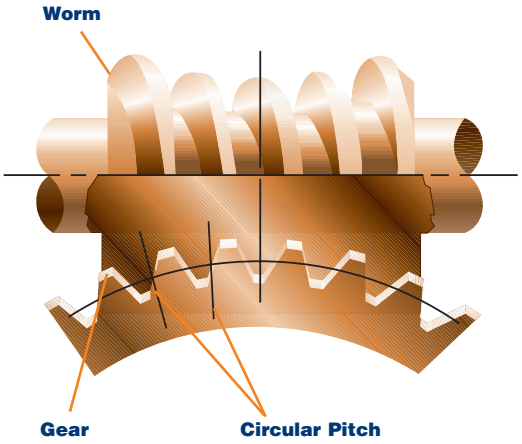

Pfaudler's unique double-enveloping worm gear design provides greater simultaneous tooth contact area to handle heavier mixing loads, affords 50% higher overload capability than competitors' gear types.

The SRW features an efficient, quiet, single reduction speed reducer. The double-enveloping worm gear drive used by Pfaudler (Figure 1) has a total efficiency greater than 90% under normal operating conditions, along with a capacity for 300% overload (compared to 200% for gearing used by competitors). It's also the quietest running design available because no helical gearing is used. With the popularity of variable frequency drives for speed variation and control, the need for helical "change gears" no longer exists. Gear ratios range from 10:1 to 20:1 for standard models, and ratios over 100:1 are available. There is no minimum input speed, and maximum input speeds are usually limited by the maximum speed of the motor in variable speed applications.

As far as the overall design is concerned, the SRW has a number of distinct advantages. There are no plastic housing components or flimsy covers. The major drive components were designed with the benefit of finite element analysis. Size-for-size, the glass-lined agitator shaft used in the SRW drive has the largest seal mounting diameter in the industry. This leads directly to longer life for mechanical seals and greater reliability in demanding process service.

Drive Model	Seal Mounting Diameter
SRW 3525	2.5"
SRW 5035	3.5"
SRW 6045	4.5"
SRW 7055	5.5"
SRW 8055	5.5"
SRW 10065	6.5"

300% Shock Load Capacity

L-10 > 100,000 Hours

Interchangeability with RW/RH Drives

The SRW Mixer Drive

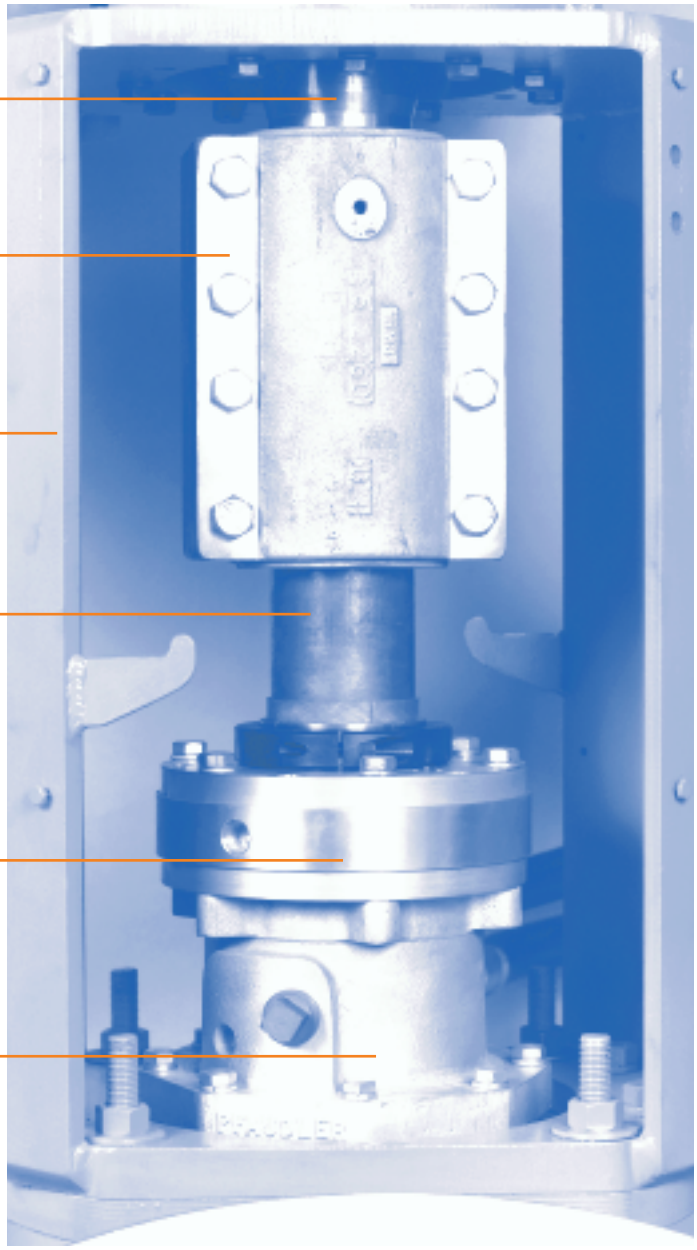

We Couldn't Have Done It Without You

Simple, Clean, Functional Design

Thanks to your input, the pedestal of the SRW drive (with covers removed) has ample room for easy access to shaft components. Note the visibility of the seal housing, shaft bearing, and shaft compression coupling. This makes inspection, maintenance, and tasks like seal changeout much easier and faster.

In addition, the simplicity of design throughout leads to higher reliability and longer life. This factor, along with easier routine maintenance, contributes substantially to increased uptime.

Easy, Positive Shaft Coupling

Your SRW drive employs the most practical method available – a vertically split compression coupling – to join the speed reducer drive shaft to the agitator shaft.

The split compression coupling has fewer parts and requires fewer steps to assemble and disassemble than other types. Since it eliminates the need for torches and pullers, it's also much faster and easier to install and remove. In brief, it's one more example of simple, functional Pfaudler design.

Separate Agitator Shaft/ Seal Bearing

The SRW drive incorporates a shaft bearing separate from the drive. The bearing bolts directly to the top of the seal housing, giving the agitator shaft rigid support. This arrangement avoids the large span between seal and bearings found in some competitors' equipment.

The agitator shaft bearing minimizes runout and deflection, improving shaft stability in the seal area. This prolongs seal life and results in less frequent seal changeouts.

Remember, Pfaudler agitator shafts and seals are significantly larger in diameter than those of our major competitors. This also helps to minimize deflections in the agitator seal area, which results in better reliability under shock loads or high stress mixing conditions, and longer seal life under normal conditions.

In addition, the upper ends of Pfaudler agitator shafts are metallized in the seal area with a more corrosion-resistant material. This prolongs seal and agitator life and makes disassembly and seal changeout easier.

Wide-open Pedestal

Robust Seal Bearing

Wet or Dry Seal Assemblies

Delivers Easier Seal Changeout

1 For safety, lock out electric motor and depressurize seal lubricator or gas system. Remove pedestal and reducer-shaft covers. Insert agitator hanging tool through upper shaft and thread it into upper end of agitator shaft to hold agitator in working position.

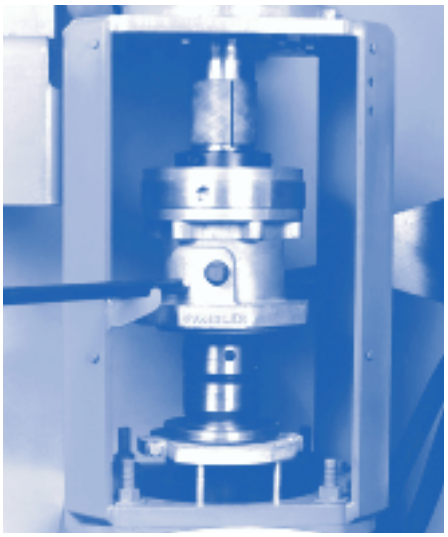

2 Remove shaft coupling. Unbolt shaft bearing and seal housing. With lift bars, raise assemblies to rest on support hooks. Push seal components up the shaft while installing maintenance clamp in agitator shaft recess to hold agitator safely in working position.

3 Unscrew and remove the agitator holding tool. Place a bar through the two eyebolts on the upper shaft and remove it.

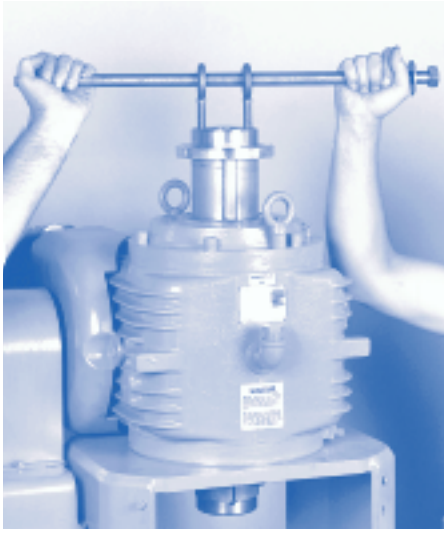

4 Raise the shaft bearing, then the seal housing, up the agitator shaft and remove through the pedestal opening. Finally, slide the seal components up the shaft and remove them. Installing a replacement seal is simply the reverse of this procedure.

Fixed-Speed Gear and Standard Foot-Mounted Motor

Drive Data (All dimensions in inches)						
Model No.	3525	5035	6045	7055	8055	10065***
WT	550	1040	2000	2500	2840	3880
HP	3-10	7.5-25	15-30	20-40	30-60	50-100
A	39	47	59	65	67	72
B	10	13	15	17	20	23
C	7	8	13	13	13	15
D	16	19	23	23	23	14
E*	23-31	29-38	35-40	40-45	44-49	51-54
Nozzle size**	4"-150#	4"-150#	6"-300#	6"-300#	8"-300#	8"-300#
No. of bosses	4	4	6	6	6	8
BC	15	15	24	24	24	24.75
Studs	¾"-10	¾"-10	1"-8	1"-8	1"-8	1¼"-7

All SRW reducers are fan-cooled. An internal cooling coil is also provided on the 8055 and 10065 models.

Drive weight is approximate and does not include: motor, shaft, and impeller. HPs shown are the 1800 RPM motor sizes that fit the drive within the service factored capacity of the reducer. Other models (e.g. SRW 6035, 7045, 10055) are available for applications which require higher output torque.

* Range given for this dimension applies to the HP range indicated for each model. The dimension can be to motor or end of motor mount.

** Other drive nozzle sizes can be accommodated on a custom basis.

*** SRW 10065 and 8065 (not shown) use the RW-style pedestal. A forced circulating lubricator is recommended for the 6.5" seal assembly used on these models.

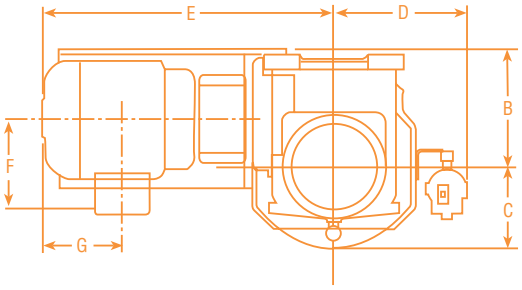

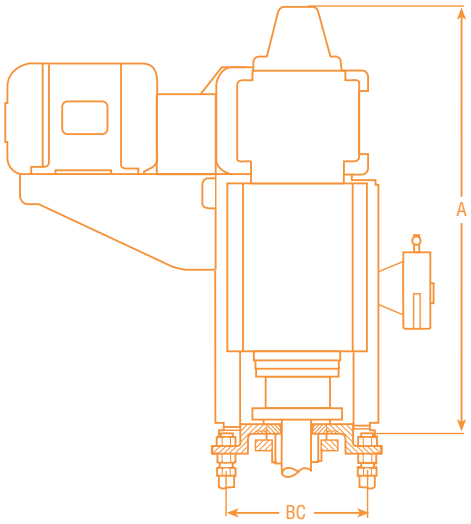

Motor Data* (All dimensions in inches)					
VF HP	Std HP	Frame size	Wt.	F	G
	3	182T	100	7.3	7.4
3	5	184T	115		7.9
5	7.5	213T	172	10	8.5
7.5	10	215T	200		9.3
10,15	15	254T	296	10.8	11
20	20	256T	388		11.9
25	25	284T	460	12.3	12.5
30	30	286T	514		13.3
40	40	324T	705	14.5	13.9
50	50	326T	756		14.7
60	60	364TS	840	15	15.5
75	75	365TS	910		16
100	100	404TS	1120	19.2	16.5

* Motor weights and dimensions are based on Class 1, Group D enclosure and vary with enclosure and manufacturer. Frame size applies to 1800 rpm motor.

SB22-700-3

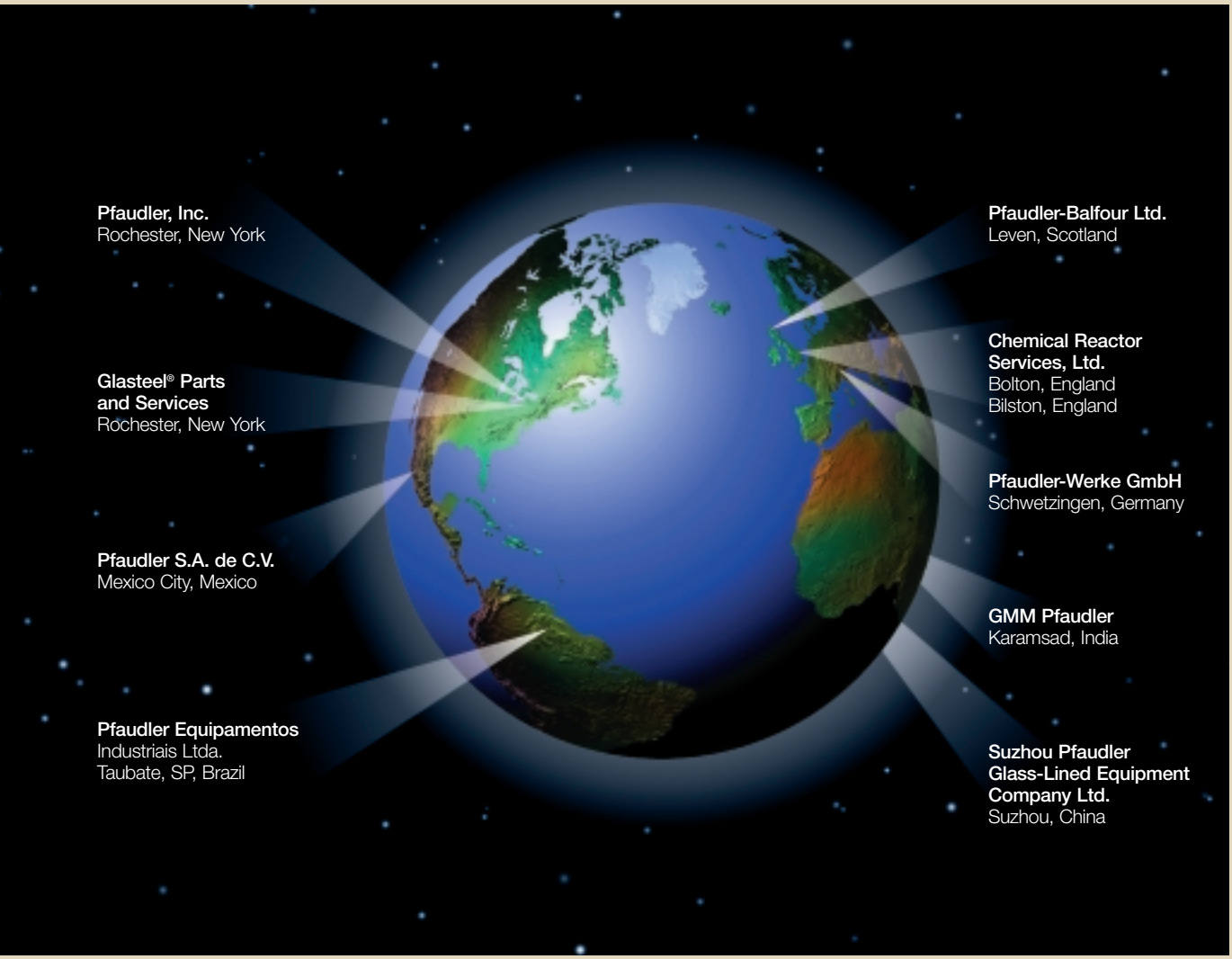

The information contained in this bulletin is believed to be reliable general guidelines for consideration of the products and services described herein. The information is general in nature and should not be considered applicable to any specific process or application. Pfaudler, Inc. expressly disclaims any warranty, expressed or implied, of fitness for any specific purpose in connection with the information contained herein.

US Facilities

Pfaudler, Inc.
Rochester, New York
Tel: (1 716) 235-1000
Fax: (1 716) 423-9644

Glasteel® Parts and Services
Rochester, New York
Tel: (1 716) 235-1010
Fax: (1 716) 235-7923

Worldwide Facilities

Chemical Reactor Services Ltd.
Bolton, England
Tel: (44 1204) 862-777
Fax: (44 1204) 577-484

Bilston, England
Tel: (44 1902) 353-637
Fax: (44 1902) 495-696

GMM Pfaudler
Karamsad, India
Tel: (91 26) 9230367
Fax: (91 26) 9231935

Pfaudler-Balfour Ltd.
Leven, Fife, Scotland
Tel: (44 1333) 423-020
Fax: (44 1333) 427-432

Pfaudler Equipamentos
Industriais Ltda.
Taubate, SP, Brazil
Tel: (55 122) 326-244
Fax: (55 122) 326-301

Pfaudler S.A. de C.V.
Mexico City, Mexico
Tel: (52 5) 355-0100
Fax: (52 5) 355-0809

Pfaudler-Werke GmbH
Schwetzingen, Germany
Tel: (49 620) 2850
Fax: (49 620) 222412

Suzhou Pfaudler Glass-Lined Equipment Company Ltd.
Suzhou, China
Tel: (86 512) 7239104
Fax: (86 512) 7232903

Pfaudler REACTOR SYSTEMS

1000 West Avenue
PO Box 23600
Rochester, NY 14692-3600
Tel: 716 235 1000
Fax: 716 235 6393
www.pfaudler.com

Glasteel® Parts and Services
A Unit of Pfaudler, Inc.

1999 Mt. Read Blvd.
PO Box 20857
Rochester, NY 14602
Tel: 716 235 1010
Fax: 716 235 7923

11/00 3M Mech No. 516