Installation and Maintenance of Stainless-Steel Spring Assist

Instruction Manual IM51-301-5

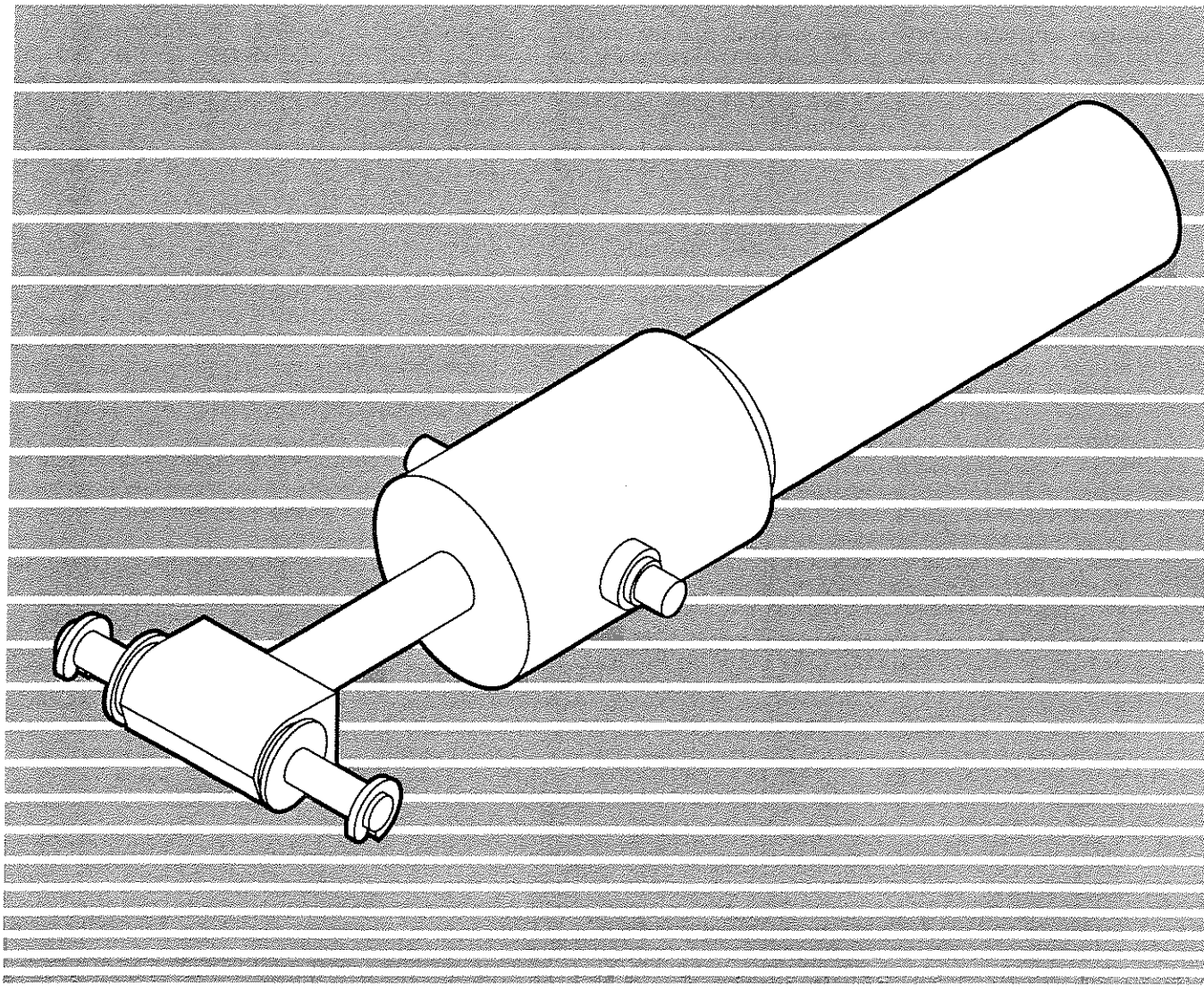

PFAUDLER
REACTOR SYSTEMS

Introductory Information

NOTE: The installation, operation and maintenance instructions which follow are believed to be reliable general guidelines for usage of the equipment described herein.

Unless otherwise specifically provided in the contract of sale, Pfaudler and/or GPS do not provide project engineering, process design or plant layout services and accordingly, the information presented herein is general in nature and should not be considered applicable to any specific process or application. While Pfaudler equipment is designed and manufactured in accordance with applicable codes and good manufacturing practices, it is the responsibility of the user to locate and install the equipment and provide those safety and warning devices which are appropriate for the specific application intended by the user.

In order to avoid injury and assure the safe operation of all Pfaudler vessels, no vessel should be operated without all openings and passageways securely closed. In cases where the top head of the vessel has been removed, the opening should be secured by a suitable cover while the vessel is in operation. All persons operating a Pfaudler vessel should have prior instruction in the proper use of the vessel during operation. Thoroughly review all drawings and Instruction Manuals provided by Pfaudler relating to this equipment before installation or operation.

To avoid damage to vessel, mixer, ancillary equipment or surrounding property or damage to persons working in the vicinity, before any maintenance on the vessel, mixer or ancillary equipment is performed, the user must consult the most current version of this manual. A list of Instruction Manuals is available by connecting to Pfaudler's Web Site at www.pfaudler.com and selecting "Request Information."

In certain applications, Pfaudler may recommend use of third party products. These products may not be compatible with certain processes and materials for which the equipment may be used in a particular application. To avoid damage to the equipment and surrounding property or damage to persons working in the vicinity of the equipment, USERS SHOULD CONTACT THE MANUFACTURER OF THESE THIRD PARTY PRODUCTS TO DETERMINE IF SUCH PRODUCTS USED IN THAT PARTICULAR INSTANCE WILL BE SAFE AND EFFECTIVE. USERS MUST STRICTLY FOLLOW ALL INSTRUCTIONS GIVEN BY THE MANUFACTURER OF THESE THIRD PARTY PRODUCTS.

Material Safety Data Sheets may be obtained by connecting to Pfaudler's Web Site at www.pfaudler.com and selecting "Request Information."

Definitions Of Potential Hazards

The following definitions are presented to clearly identify the level of hazard that is recognized by Pfaudler, Inc. and/or Glasteel® Parts and Services (GPS) as being involved in the installation and use of Stainless Steel Spring Assists and are dealt with in this Instruction Manual. Each definition is given a characteristic typographic treatment and format, here and throughout the Instruction Manual, to help readily identify the level of hazard referred to in all cases.

DANGER: Identifies hazards which will result in severe personal injury or death.

WARNING: *Identifies hazards which could result in personal injury.*

CAUTION: *Identifies hazards which could result in damage to equipment or property.*

NOTE: Alerts users to pertinent facts and conditions.

Pfaudler Warranty and Conditions

Seller warrants that equipment manufactured by it is free of defects in materials, workmanship, and design, and will meet the specifications set forth. THIS WARRANTY IS EXCLUSIVE, and shall be in effect for the earlier of 12 months from date of installation, or 18 months from date of shipment. SELLER DISCLAIMS ALL OTHER WARRANTIES, EXPRESSED, IMPLIED OR STATUTORY, ORAL OR WRITTEN, INCLUDING THE WARRANTY OF FITNESS FOR A PARTICULAR PURPOSE AND MERCHANTABILITY. Seller's warranty with respect to equipment manufactured by others is limited to any warranties which Seller can enforce against the manufacturer. In the event equipment supplied by Seller fails to meet the foregoing express warranty, Seller's sole liability shall be, at its option, to repair or replace, F.O.B. its factory, the defective or non-conforming part or parts, or refund the purchase price thereof. Buyer must notify Seller in writing of any claim under the above warranty within 30 days of discovery of defect or non-conformance, specifying the defect or non-conformance within the terms of the above warranty. Seller will then have a reasonable period thereafter to inspect the alleged defective or deficient equipment and to conduct, at its expense, any tests reasonably necessary in its opinion, and to specify and supply at Seller's expense replacements or additions to the equipment. Buyer will make any modifications and installation of additional or replacement equipment at Buyer's expense in accordance with Seller's instructions and will remove and return any equipment being replaced, at Buyer's expense, freight prepaid, to Seller.

This warranty is subject to certain conditions. Among Buyer actions which may void this warranty are:

1. Use of vessel other than that approved by Pfaudler and/or GPS.
2. Use of gaskets, clamps or bolts not approved by Pfaudler and/or GPS.
3. Use of inadequate number of clamps or bolts.
4. Prolonged storage without adequate protection.
5. Improper rigging or installation procedures.
6. Repair by unauthorized personnel.
7. Repair of defect without prior notification to Pfaudler and/or GPS.
8. Denial of inspection.
9. Repair or modification not in accordance with ASME Boiler and Pressure Vessel Code.
10. Use of processing conditions and/or chemicals not approved by Pfaudler and/or GPS.

WARNING: *Refer to the appropriate Pfaudler Glasteel Sales Bulletin or Data Sheet for chemical corrosion guidelines.*

11. Operation at temperature or pressure beyond the approved limits of vessel or accessories.
12. Inadequate cleaning of exterior of vessel to remove acid spills.
13. Use of jacket cleaning fluids not approved by Pfaudler and/or GPS.
14. Use of drive or seal without Pfaudler and/or GPS approved lubricant.
15. Spark testing at a voltage greater than 5000 volts stabilized.

NOTE: Consumables such as gaskets, seals, etc. are not covered by the warranty.

Table of Contents

1. Description 4

2. Installation 4
2.1 On an Alloy Vessel 4
2.1.1 Parts Supplied by Pfaudler 4
2.1.2 Parts and Tools Supplied by User 4
2.1.3 Remove Manway Cover from Vessel 4
2.1.4 Install Two-Hole Lugs on Manway Cover 4
2.1.5 Install Hinge Arms on Vessel Manway Cover . . . 5
2.1.6 Install Spring Assist 5
2.2 On a Glasteel Vessel 8
2.2.1 Parts Supplied by Pfaudler 8
2.2.2 Parts and Tools Supplied by User 8
2.2.3 Remove Manway Cover from Vessel 8
2.2.4 Install Two-Hole Hinge Lugs on Manway Cover 8
2.2.5 Install Hinge Arm Adapter Brackets 10
2.2.6 Install Spring Assist 10

3. Replacement of Carbon Steel Spring Assist with Stainless Steel Assist . . . . . back cover

4. Adjustment of Spring Load . . . . . back cover

5. Removal of Spring Assist . . . . . back cover

6. Maintenance . . . . . back cover

7. Vessels with Factory Installed Spring Assist . . . . . back cover

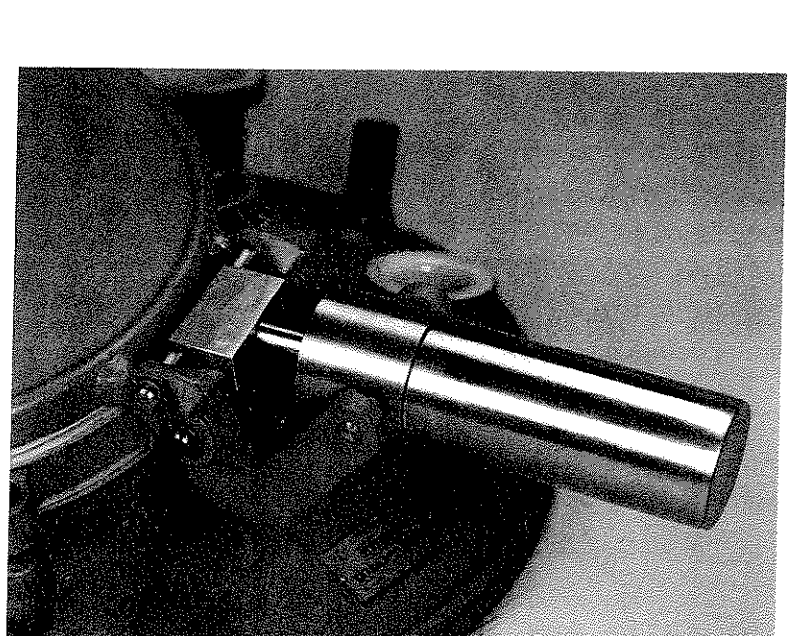

Figure 1: Spring Assist Installed on Manway Cover

1. Description

A Pfaudler Stainless Steel Spring Assist (see Figure 1, page 3) allows a manway cover to be opened and closed easily and safely. The Spring Assist is matched to the size and weight of the cover. When equipped with a Spring Assist, a manway cover will remain in any position from fully open to nearly closed without additional support. When properly adjusted, the cover will not inadvertently drop or slam.

Existing manway covers can be modified in the field to accommodate the stainless steel Spring Assist by replacing the existing hinge assembly with one designed specifically for use in such retrofit applications. This required hinge assembly is available and must be purchased separately.

The stainless steel Spring Assist is interchangeable with the carbon steel Assist, and one can be substituted easily for the other in the field.

2. Installation

2.1 On an Alloy Vessel

2.1.1 Parts Supplied By Pfaudler

1. Spring Assist (quantity 1) with one hinge pin

NOTE: The following parts must be ordered separately if needed for your specific installation.

2. Two-hole hinge lugs (quantity 2).
3. Lug locating block (quantity 1). See Figure 2.
4. Hinge arms (quantity 2).
5. Arm locating block (quantity 1). See Figure 5.
6. Sleeve bearings for hinge arms (quantity 2).

2.1.2 Parts And Tools Supplied By User

1. 5/8-11 x 7 inch long threaded rods (quantity 2).
2. 5/8-11 hex nuts (quantity 4).
3. Hammer
4. 15/16 inch open-end or adjustable wrenches (quantity 2).
5. C-clamps with 3 inch or greater throat (quantity 2).
6. Hacksaw
7. Pencil grinder
8. Welding equipment
9. 1/8 inch diameter E-309-15 welding rod

2.1.3 Remove Manway Cover From Vessel

WARNING: *Make sure vessel is clean, empty and free of fumes so it can be opened safely.*

1. Loosen cover clamps and swing them back.
2. Remove bolts from cover hinge lugs.
3. Remove manway cover from vessel and place it on bench.

2.1.4 Install Two-Hole Hinge Lugs On Manway Cover

NOTE: If your manway cover has single-hole lugs, they must be replaced with two-hole lugs to accommodate the Spring Assist. If your cover already has two-hole hinge lugs, go to Section 2.1.5.

2.1.4.1 Remove Single-Hole Lugs

1. Mark a center line on the cover. A center line can be located by finding the center point between the hinge lugs and the center point of the cover. Lay a straight edge on these two points and mark a center line on the cover.

2. Cut off existing hinge lugs flush with the outer diameter of the cover. Be careful to keep heat generated by cutting to a minimum. **Do not burn lugs off.**

3 Discard cut-off lugs and grind area smooth.

2.1.4.2 Weld Two-Hole Lugs To Manway Cover

1. Assemble both two-hole hinge lugs to the lug locating block (Figure 2) using two 5/8-11 x 7 inch threaded rods and four hex nuts.

2. Position lug-block assembly on cover (see Figure 3). Notch in block should line up with center line on cover (Section 2.1.4.1, step 1). Grind lugs to fit, if necessary.

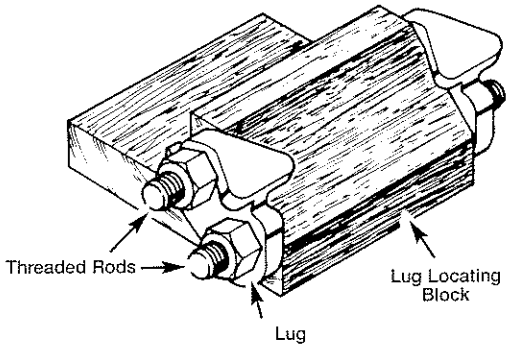

Figure 2: Hinge Lugs Assembled to Locating Block

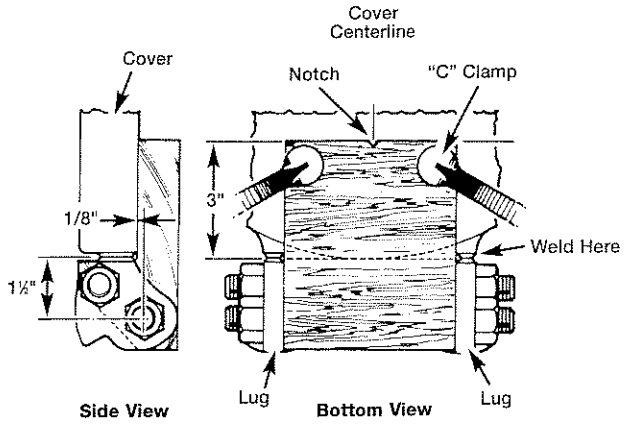

Figure 3: Lug-Block Assembly Clamped on Cover

3. Secure lug-block assembly in place with two C-clamps as shown in Figure 3.

4. Tack weld lugs to cover, using E-309-15 welding rod.

5. Weld top side of one lug, then top side of second lug.

6. Weld one side of first lug, then one side of second lug alternating until tops and sides are welded. Keep heat to a minimum.

7. Remove nuts, threaded rods and locating block. Finish welding bottoms and inner edges of lugs.

8. Grind welds flush between hinge lugs. This must be done to eliminate binding.

9. Place cover on vessel with Pfaudler CR-Series gasket between cover and manway collar.

10. Assemble threaded rod and hex nuts through elongated slots of hinge lugs and holes in hinge arms. Check for binding, and relieve where necessary. A hammer may be required to move lugs slightly, but this should be done with caution.

NOTE: Threaded rod should set in bottom half of slots of collar lugs. Lugs may have to be moved slightly to accomplish this.

11. Remove threaded rod and nuts.

2.1.5 Install Hinge Arms On Vessel Manway Collar

Note: If your vessel already has hinge harms welded to the manway collar, go to Section 2.1.6.

Hinge arms can be welded onto collar either at location of present hinge lugs (merely cut off old lugs) or directly opposite old lugs (180°).

1. Place cover on vessel manway collar with 1/4 inch thick wood spacers or CR-Series gasket (see Figure 4.).

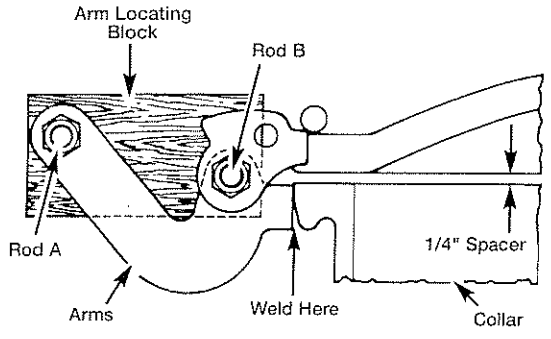

Figure 4: Hinge Arms and Locating Block Assembled to Manway Collar

2. Assemble rod B (Figure 5) through cover lugs, hinge arms and wood arm-locating block with 1/32 inch shim washers between lugs and hinge arms. Secure with two hex nuts.

NOTE: Lower hinge arms so rod is at bottom of elongated slots in both lugs.

3. Assemble rod A (Figure 5) through outer holes in hinge arm and locating block. Secure with two hex nuts.

4. Align beveled end of hinge arms with outer diameter of vessel manway collar (cut back ends if necessary).

5. Tack weld arms to collar.

6. Remove nuts from rod B and remove rod.

7. Remove cover and spacers or gasket from vessel manway collar. Place cover on bench.

8. Reassemble rod B through hinge arms and locating block. Secure with hex nuts.

9. Make sure both hinge arms are parallel and positioned as shown in Figures 4 and 5. Use a hammer to move arms, if necessary.

10. Finish welding all around both hinge arms.

11. Remove rods A and B and arm-locating block. Discard block.

12. Place cover on vessel manway collar with 1/4 inch thick wood spacers or CR-Series gasket.

13. Reassemble rod B through hinge arms and cover lugs, and examine location of hinge lugs relative to rod. Check for binding and relieve where necessary.

14. Remove rod B.

2.1.6 Install Spring Assist

NOTE: Numbers in parentheses identify parts on Figure 6.

1. Disassemble Spring Assist using the following procedure:

   a. Loosen two set screws (5), and carefully pull cover (14) out of yoke (8) and off of Spring Assist.

   b. Loosen and remove two jam nuts (13) and washer (12).

   c. Remove 20 small conical disc springs (11) and 31 large conical disc springs (6).

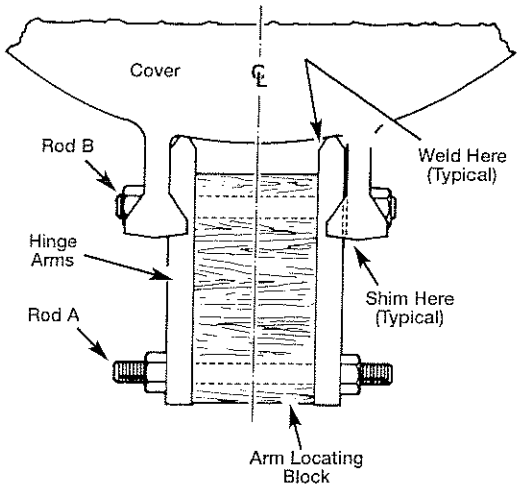

Figure 5: Hinge Arms Ready for Welding to Manway Cover

d. Slide yoke (8) off of tension bar (10).

e. Remove two 2-inch washers (see Figure 7) from inside of yoke (8).

f. Press both yoke pins (4) through holes into yoke. See Figure 7. Remove pins from inside of yoke and put them aside.

g. If hinge pin (1) is installed in hole in cross head (3), remove retaining ring (2) and washer (7) from one end of pin, slide pin out of cross head and put it aside. Be sure to keep retaining ring, washer and pin together.

2. Install sleeve bearings (15) in holes at end of hinge arms using the following procedure.

a. Run a 21/32 inch diameter drill through holes in end of each hinge arm.

b. Chamfer outer edge of hole in each arm to ease insertion of bearings.

c. Put sleeve bearing (15) on yoke pin (4) as shown in Figure 8.

NOTE: Yoke pin is used here only as a tool to insert bearing into hole in hinge arm.

d. Insert hinge pin and bearing into chamfered edge of hole in hinge arm. Tap pin lightly if required to seat bearing. Edge of bearing should be flush with edge of hinge arm.

e. Remove hinge pin from bearing. It should slide out easily.

f. Repeat steps c through e with other sleeve bearing.

3. Put retaining ring (2) on one end of each hinge pin (1).

4. Position and support manway cover so cover hinge lugs are supported on hinge arms and cover is fully open (see Figure 9).

5. Add washer (7) to one hinge pin, and insert pin through holes (Figure 9, location A) to connect cover hinge lugs to hinge arms. Hinge pin should slide into position easily, although manipulation of cover may be required to align holes in lugs with holes in arms.

6. Put washer and retaining ring on open end of hinge pin.

7. Hold yoke (8) in position between hinge arms with setscrew holes on lower portion of yoke. If necessary bend hinge arms so yoke fits between them with a slight clearance. Yoke must pivot freely between arms.

8. Align holes in yoke with holes nearest end of hinge arms, and insert yoke pins (4) through holes in yoke from inside and into sleeve bearings in hinge arms (see Figure 7).

CAUTION: *Make sure yoke pins do not extend into hollow interior of yoke. They must be flush with interior wall.*

9. Tilt yoke so tension bar (10) with cross head (3) attached can be inserted through 3/4 inch hole in end of yoke. Insert tension bar through hole and yoke.

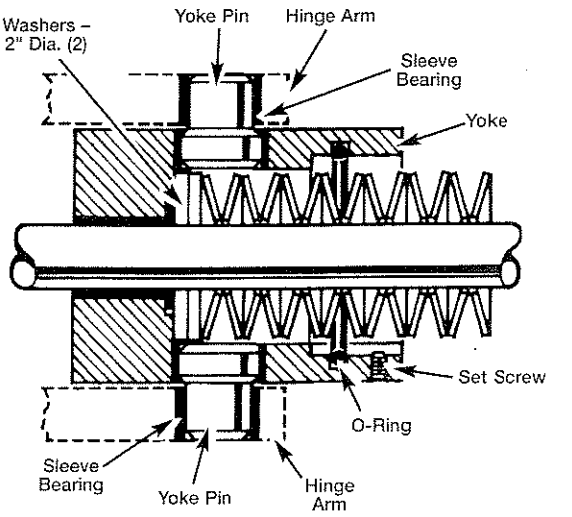

Figure 7: Cross-Section of Yoke Assembly

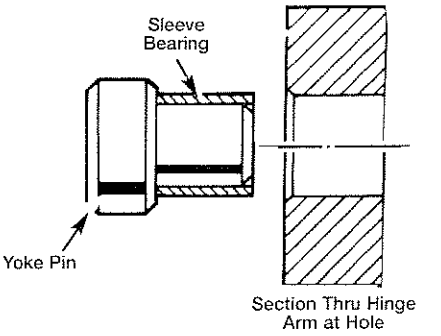

Figure 8: Inserting Bearing into Hinge Arm

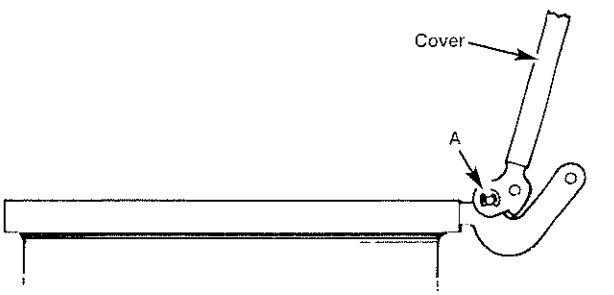

Figure 9: Manway Collar and Cover

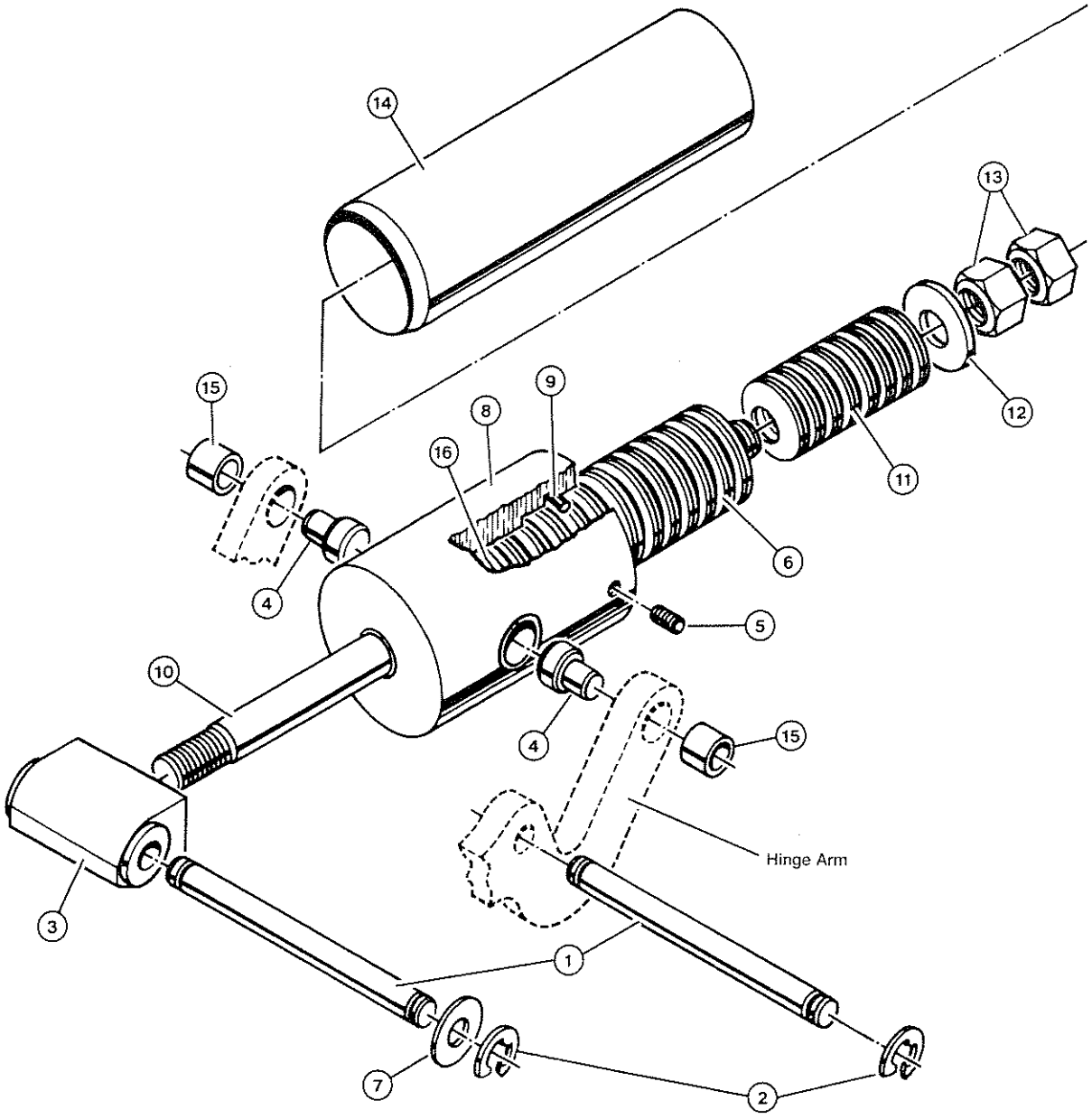

1. Hinge Pin (2)
2. Retaining Ring (4)
3. Cross Head
4. Yoke Pin (2)
5. Set Screw (2)
6. Conical Disc Springs (31)
7. Washer (2)
8. Yoke
9. O-Ring (Inside Yoke)
10. Tension Bar
11. Conical Disc Springs (20)
12. Washer
13. Jam Nut (2)
14. Cover
15. Sleeve Bearing (2) for Hinge Arm
16. Washers, 2 inch (2) (Inside Yoke)

Figure 6: Exploded View of Stainless Steel Spring Assist

10. Slide two 2 inch washers over end of tension bar (10) and into yoke (see Figure 7).

11. Position cross head (3) between cover hinge lugs so hole in cross head is aligned with upper holes in hinge lugs (Figure 10, location B) and corner of cross head with radius is on top.

12. Put washer (7) on end of hinge pin (1), and insert pin through holes in hinge lugs and cross head (3).

13. Put washer (7) and retaining ring (2) on open end of pin.

14. Stack 31 large conical disc springs (6) on tension bar as shown in Figures 6 and 11.

15. Stack 20 small conical disc springs (11) on tension bar as shown in Figures 6 and 11.

16. Slide washer (12) onto tension bar.

17. Lubricate threads on end of tension bar with Never-Seez lubricant.

18. Screw jam nuts (13) onto end of tension bar.

19. Position CR-Series gasket on manway collar.

NOTE: If required by your installation, position gasket on underside of manway cover and form gasket tabs to hold gasket in position. Trim tab if necessary (see Figure 10).

20. Adjust spring load using procedure in Section 4.

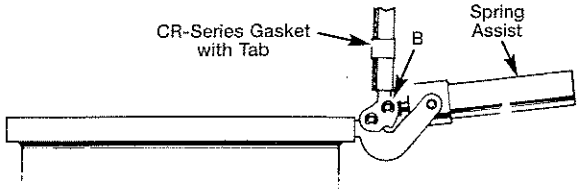

Figure 10: Manway Collar, Cover and Spring Assist

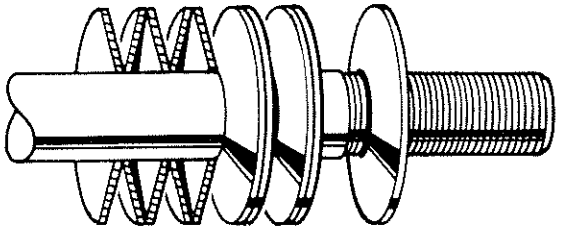

Figure 11: Disc Springs as Installed on Tension Bar

2.2 On a Glasteel Vessel

2.2.1 Parts Supplied By Pfaudler

1. Spring Assist (quantity 1) with one hinge pin

NOTE: The following parts must be ordered separately if needed for your specific installation.

2. Two-hole hinge lugs (quantity 2).

3. Lug locating block (quantity 1). See Figure 14.

4. Sleeve bearings for hinge arms (quantity 2).

5. Hinge-arm adapter brackets (quantity 2). See Figure 18.

2.2.2 Parts and Tools Supplied By User

1. 5/8-11 x 7 inch long threaded rods (quantity 2).

2. 5/8-11 hex nuts (quantity 2).

3. Hammer

4. 15/16 inch open-end or adjustable wrenches (quantity 2).

5. C-clamps with 3-inch or greater throat (quantity 2).

6. Hacksaw

7. Pencil grinder

8. Welding equipment

9. 9/32 inch diameter E-7018 welding rod

10. Duct tape

2.2.3 Remove Manway Cover From Vessel

WARNING: *Make sure vessel is clean, empty and free of fumes so it can be opened safely.*

1. Loosen cover clamps and swing them back.

2. Remove bolts from cover hinge lugs.

3. Remove manway cover from vessel and place it on bench.

4. If applicable, remove protection ring and gasket from manway collar.

2.2.4 Install Two-Hole Hinge Lugs On Manway Cover

NOTE: If your manway cover has single-hole hinge lugs, they must be replaced with two-hole lugs to accommodate the Spring Assist. If your cover already has two-hole hinge lugs, go to Section 2.2.5.

2.2.4.1 Remove Single-Hole Lugs

1. Grind off glass if it extends beyond edge of cover onto lug areas (see Figure 12). A pencil grinder with 1/16 to 1/8 inch wide wheel is recommended for this purpose to help prevent back-chipping glass into gasket area of cover.

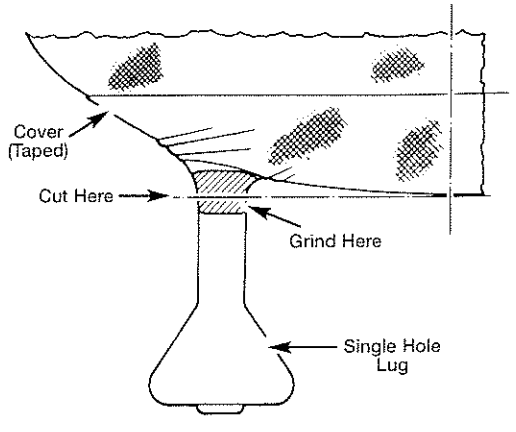

Figure 12: Grinding and Cutting Locations on Cover

2. Cover entire glass surface of manway cover (including sight glass opening) with duct tape. This protects glass against weld spatter, grinding grit, etc.

CAUTION: *Procedures calling for grinding or welding on the exterior of glass-lined equipment in the field can be accomplished successfully. However, an unpredictable risk of glass failure does exist. Pfaudler and/or GPS are not responsible for any glass failure that results from such grinding or welding procedures.*

3. Mark a center line across the entire taped area of the cover. A center line can be drawn by finding the center point between the hinge lugs and a center point in the center of the cover. Lay a straight edge on these two points and mark a center line on the taped area of the cover.

4. Mark lugs for cutoff. Use a straight edge to draw a line on both lugs tangent to the cover at the center line (see Figure 12).

5. Cut off the lugs and discard them.

6. Grind a 1/8 inch x 45° bevel all around cuts (see Figure 13).

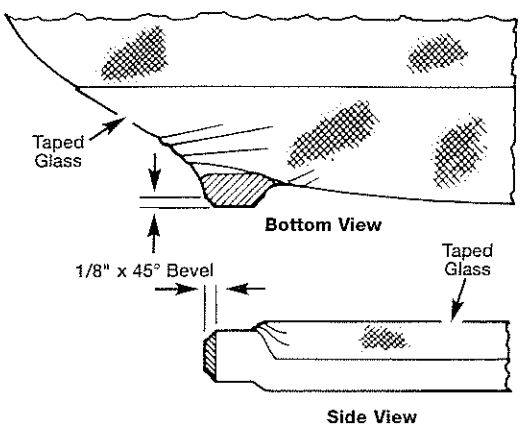

Figure 13: New Bevel on Cover

2.2.4.2. Weld Two-Hole Lugs on Manway Cover

1. On taped side of cover, mark a perpendicular to center line drawn in Section 2.2.4.1, step 3 at a point three inches from hinge edge of cover.

2. Assemble both two-hole hinge lugs to the locating block (supplied) using two 5/8-11 x 7 inch threaded rods and four hex nuts. See Figure 14.

3. Position lug-block assembly on cover (see Figure 15). Notch in block should line up with center line of cover, and front edge of block should lie on perpendicular line drawn in step 1. Grind lugs to fit, if necessary.

4. Secure lug-block assembly in place with two C-clamps as shown in Figure 15.

5. Tack weld lugs to cover, using E-7018 welding rod.

6. Weld top side of one lug, then top side of second lug.

7. Weld one side of first lug, then one side of second lug, alternating until tops and sides are welded. Keep heat to a minimum.

8. Remove nuts, threaded rods and locating block. Finish welding bottoms and inner edges of lugs.

9. Grind welds flush between hinge lugs. This must be done to eliminate binding when cover is closed.

10. Remove tape from cover.

11. Place cover on vessel protection ring with Pfaudler CR-Series gasket between cover and protection ring.

12. Reassemble threaded rod and nuts through elongated slots of hinge lugs and through adapter-bracket or protection-ring hinge arms. Check for binding, and relieve where necessary. A hammer may be required to move lugs slightly, but this should be done with caution.

NOTE: Threaded rod should set in bottom half of slots. Lugs may have to be moved slightly to accomplish this.

13. Remove threaded rod.

14. Repaint all new welds and bare metal.

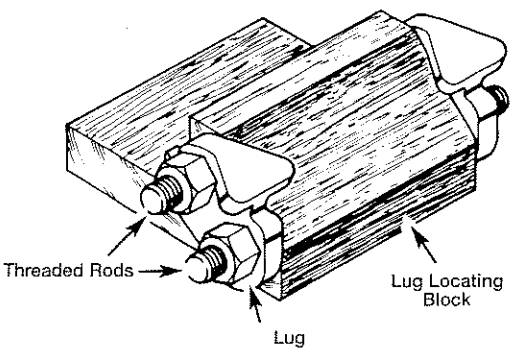

Figure 14: Hinge Lugs Assembled to Locating Block

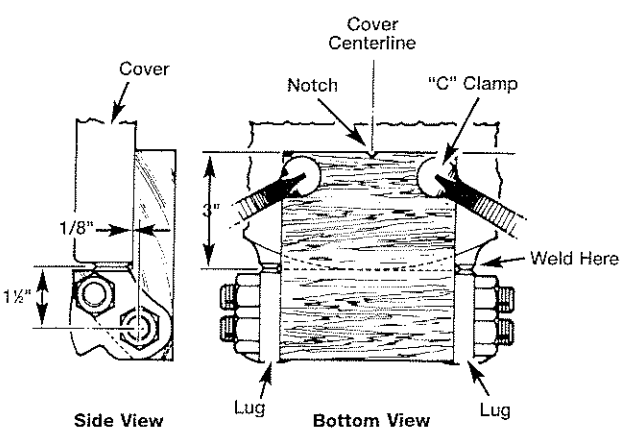

Figure 15: Lug-Block Assembly Clamped on Cover

2.2.5 Install Hinge Arm Adapter Brackets (If Required)

The hinge arm adapter brackets must be installed on the hinge lugs of a vessel manway collar to permit installation of a Spring Assist with a conventional protection ring. Protection rings with Spring Assist adapter lugs installed are also available from Pfaudler.

1. Make certain that your manway cover has two-hole hinge lugs. If it has single-hole lugs, refer to Section 2.2.4 for instructions on installing two-hole lugs.

CAUTION: *Procedures calling for grinding or welding on the exterior of glass-lined equipment in the field can be accomplished successfully. However, an unpredictable risk of glass failure does exist. Pfaudler and/or GPS are not responsible for any glass failure that results from such grinding or welding procedures.*

2. Inspect manway collar lugs for correct alignment. The elongated slots should be in line and located from the top of the manway collar as indicated in Figure 16.

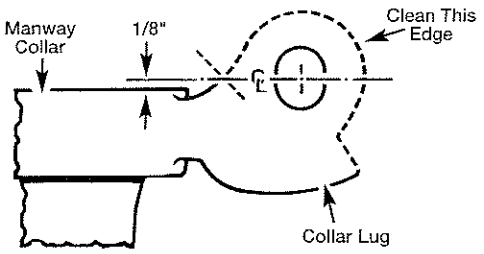

Figure 16: Preparing Collar Lugs

3. Grind or file edges indicated in Figure 16 to remove forging flash.

4. Insert adapter bracket over top of hinge lugs and into position as shown in Figure 17. If bracket does not fit correctly, repeat step 3.

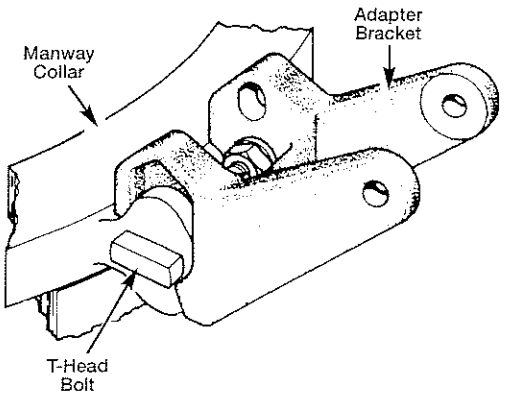

Figure 17: Installing Adapter Bracket

5. Assemble T-head bolt, lockwasher and hex nut to each collar lug as shown in Figure 17. Tighten bolts to approximately 75 foot-pounds.

6. Install protection-ring gasket and protection ring.

7. Install Spring Assist as described in Section 2.2.6. Figure 18 shows a final assembly with bracket. Figure 18 shows a tabbed cover gasket recommended for convenience. However, conventional cover gaskets can be used.

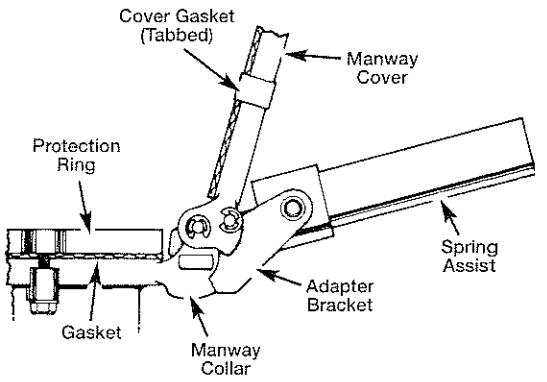

Figure 18: Spring Assist Installed on Adapter Bracket

2.2.6 Install Spring Assist

NOTE: Numbers in parentheses identify parts on Figure 6.

1. Install protection ring using the following procedure.

   a. Position new gasket on manway flange. Shim if required (see Pfaudler Instruction Manual IM81-100).

   b. Position protection ring on gasket, making sure it is right side up and properly oriented with hinge lugs 180° from lugs on manway collar (see Figure 19).

   c. Bolt protection ring snugly to collar (Figure 19). Do not overtighten. Refer to Pfaudler Instruction Manual IM81-100 for recommended bolt torques.

2. Disassemble Spring Assist using the following procedure.

   a. Loosen two set screws (5) and carefully pull cover (14) out of yoke (8) and off of Spring Assist.

   b. Loosen and remove two jam nuts (13) and washer (12).

   c. Remove 20 small conical disc springs (11) and 31 large conical disc springs (6).

   d. Slide yoke (8) off of tension bar (10).

   e. Remove two 2 inch washers (see Figure 7) from inside of yoke (8).

   f. Press both yoke pins (4) through holes into yoke. See Figure 7. Remove pins from inside of yoke and put them aside.

g. If hinge pin (1) is installed in hole in cross head (3), remove retaining ring (2) and washer (7) from one end of pin, slide pin out of cross head and put it aside. Be sure to keep retaining ring, washer and pin together.

3. Install sleeve bearings (15) in holes at end of hinge arms or adapter brackets using the following procedure.

a. Run a 21/32 inch diameter drill through holes in end of each arm.

b. Chamfer outer edge of hole in each arm to ease insertion of bearings.

c. Put sleeve bearing (15) on yoke pin (4) as shown in Figure 8.

NOTE: Yoke pin is used here only as a tool to insert bearing into hole in hinge arm.

d. Insert yoke pin and bearing into chamfered edge of hole in hinge arm. Tap pin lightly if required to set bearing. Edge of bearing should be flush with edge of hinge arm.

e. Remove yoke pin from bearing. It should slide out easily.

f. Repeat steps c through e with other sleeve bearing.

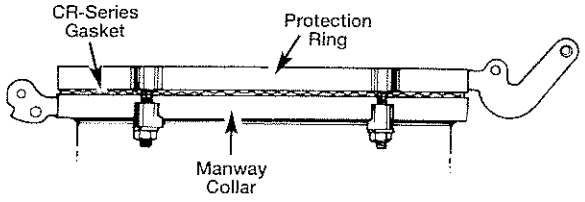

Figure 19: Manway Collar with Protection Ring

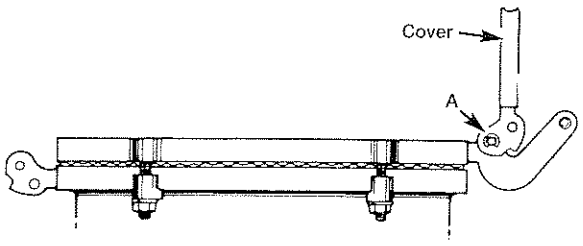

Figure 20: Manway Cover on Protection Ring

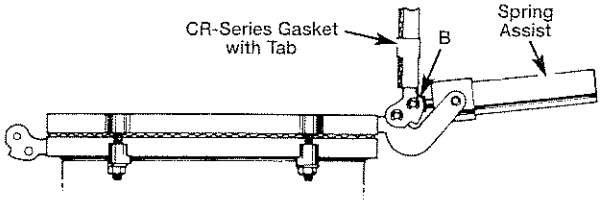

Figure 21: Spring Assist Installed on Protection Ring Hinge Arms

4. Put retaining ring (2) on one end of each hinge pin (1).

5. Position and support manway cover so cover hinge lugs are supported on hinge arms and cover is fully open (see Figure 20).

6. Add washer (7) to one hinge pin, and insert pin through holes (Figure 20, location A) to connect cover hinge lugs to hinge arms. Hinge pin should slide into position easily, although manipulation of cover may be required to align holes in lugs with holes in arms.

7. Put washer and retaining ring on open end of hinge pin.

8. Hold yoke (8) in position between hinge arms with setscrew holes on lower portion of yoke. If necessary, bend hinge arms so yoke fits between them with a slight clearance. Yoke must pivot freely between arms.

9. Align holes in yoke with holes nearest end of hinge arms, and insert yoke pins (4) through holes in yoke from inside and into sleeve bearings in hinge arms (see Figure 7).

10. Tilt yoke so tension bar (10) with cross head (3) attached can be inserted through 3/4 inch hole in end of yoke. Insert tension bar through hole and yoke.

11. Slide two 2 inch washers over end of tension bar and into yoke (see Figure 7).

12. Position cross head (3) between cover hinge lugs so hole in cross head is aligned with upper holes in hinge lugs (Figure 21, location B) and corner of cross head with radius is on top.

13. Put washer (7) on end of hinge pin (1), and insert pin through holes in hinge lugs and cross head (3).

14. Put washer (7) and retaining ring (2) on open end of pin.

15. Stack 31 large conical disc springs (6) on tension bar as shown in Figures 6 and 11.

16. Stack 20 small conical disc springs (11) on tension bar as shown in Figures 6 and 11.

17. Slide washer (12) onto end of tension bar.

18. Lubricate threads on end of tension bar with Never-Seez lubricant.

19. Screw jam nuts (13) onto end of tension bar.

20. Position CR-Series gasket on underside of manway cover and form gasket tabs over lip of cover to hold gasket in position (see Figure 21). Trim tabs if necessary.

21. Adjust spring load using procedure in Section 4.

3. Replacement of Carbon Steel Spring Assist with Stainless Steel Assist

NOTE: Numbers in parentheses identify parts on Figure 6.

1. Remove carbon steel Spring Assist using the procedure in Section 5.

NOTE: The carbon steel Spring Assist does not have yoke pins. The yoke is fastened to the hinge arms by bolts which thread through the holes in the hinge arms and into the yoke.

2. Replace carbon steel hinge pin (1) which fastens hinge arms to cover lugs with stainless steel pin.

3. Install stainless steel Spring Assist using the procedure in Section 2.1.6 for alloy vessel or Section 2.2.6 for Glasteel vessel.

4. Adjustment of Spring Load

NOTE: Numbers in parentheses identify parts on Figure 6.

The spring load of the Spring Assist is adjustable to compensate for varying cover weights and for the addition of cover accessories (sight glass, light assembly, etc.). Use the following procedure to establish the correct spring load to balance your cover.

1. Raise manway cover to full-open position.

2. Remove cover (14) from yoke.

3. Loosen outer jam nut (13) and adjust inner jam nut to balance weight of manway cover. Tightening nut will increase spring load and compensate for additional weight.

4. Check for correct spring load by closing manway cover. When spring load is correctly adjusted, cover will rise about 3/4 inch from fully closed position on collar and will remain balanced in virtually all other positions up to vertical.

5. Open manway cover and repeat steps 3 and 4 until correct spring load is achieved.

6. When spring load is correctly adjusted, hold inner jam nut in place against springs and tighten outer jam nut securely against inner nut.

7. Install cover (14) into yoke. Lubricant may be required on O-ring to ease installation of cover. Make sure cover is seated securely in yoke.

8. Adjust set screws so they are tight against cover.

5. Removal of Spring Assist

NOTE: Numbers in parentheses identify parts on Figure 6.

1. Raise manway cover to full open position to remove tension from disc springs. Support cover securely in this position.

2. Loosen two set screws (5) and carefully pull cover (14) out of yoke (8) and off of Assist.

3. Loosen and remove two jam nuts (13) and washer (12).

4. Remove 20 small conical disc springs (11) and 31 large conical disc springs (6) from tension bar.

5. Remove two 2 inch washers (see Figure 7) from inside of yoke (8).

CAUTION: *The Spring Assist must be firmly supported while performing steps 6, 7, and 8.*

6. Support Spring Assist and press two yoke pins (4) through holes in hinge arms and into yoke (8). See Figure 7. Remove pins from inside of yoke.

7. Remove washer (7) and retaining ring (2) from one end of hinge pin that passes through cross head (3) and cover hinge lugs. Pull pin out of cross head and lugs.

8. Remove Spring Assist from cover.

6. Maintenance

The maintenance required for a Spring Assist includes keeping the exposed portions of the hinge mechanism clean and covered with grease.Routinely inspect sleeve bearings for wear or degradation and replace as necessary.

7. Vessels with Factory Installed Spring Assist

For safety when opening the manway cover of a vessel positioned horizontally in a skid, the spring load of a factory installed Spring Assist is relaxed prior to shipment. Adjustment of the spring load to balance the cover weight must be done after setting and leveling the vessel. Refer to Section 4 of this manual for proper procedure.

pfaudler
REACTOR SYSTEMS

1000 West Avenue
PO Box 23600
Rochester, NY 14692-3600
Phone: 585 235 1000
Fax: 585 235 6393
www.pfaudler.com

GPS
Glasteel®Parts and Services
A Unit of Pfaudler, Inc.

1999 Mt. Read Blvd.
PO Box 20857
Rochester, NY 14602
Phone: 585 235 1010
Fax: 585 235 7923

Copyright©
Pfaudler, Inc. 2003
A Unit of Robbins & Myers, Inc.
All rights reserved.

Glasteel® is a registered trademark of Pfaudler, Inc.